THIS DRAWING IS UNPUBLISHED. RELEASED FOR PUBLICATION ,19 .
© COPYRIGHT 19 BY AMP INCORPORATED. ALL RIGHTS RESERVED.

LOC	DIST
AD	36

REVISIONS

P	LTR	DESCRIPTION	DATE	DWN	APVD
	G	SUPERSEDED:-1,-2 & -3; EC 0U1C-0043-01	04JUN01	DLD	AWR

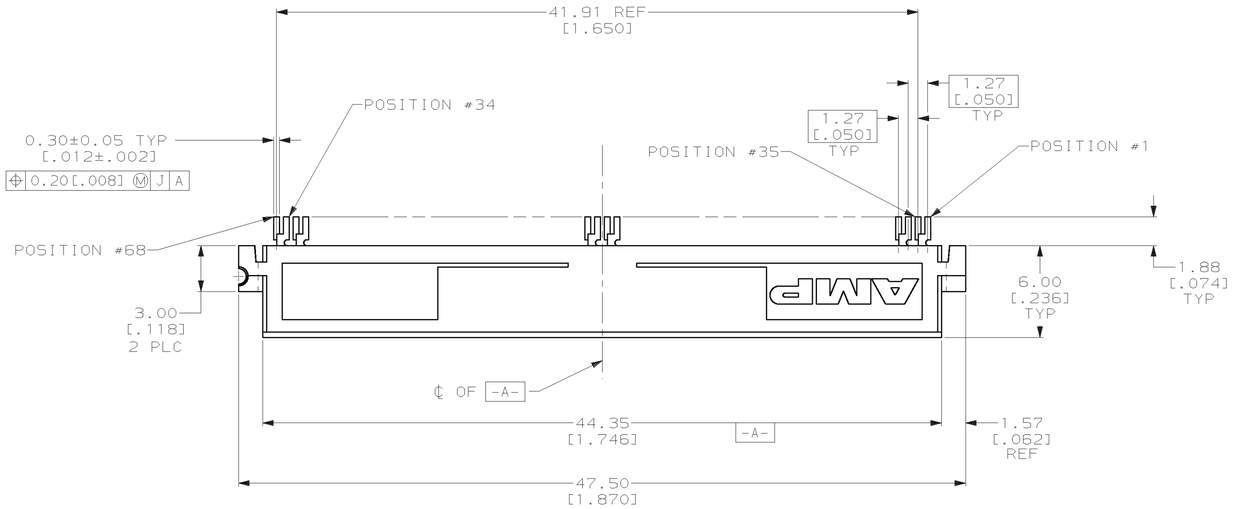

1. HOUSING: LCP, GLASS FILLED, BLACK.
2. CONTACT: BERYLLIUM COPPER.
3. CONTACT: 0.00076[.000030] MINIMUM GOLD ON MATING AREA, 0.00254[.000100] MINIMUM MATTE 93/7 TIN-LEAD ON SOLDER TAIL, ALL OVER 0.00127[.000050] MINIMUM SEMI-BRIGHT NICKEL.
4. DIMENSION IN REFERENCE TO LOWEST POINT OF EACH LEAD.
5. POINT OF CONTACT 2.3[.091] REF FROM MATING FACE.
6. APPLIES TO ALL SOLDER TAILS.
7. PACKAGED IN TUBES.
8. PACKAGED IN 56mm WIDE TAPE AND PLASTIC REEL.
9. PACKAGED IN 72mm WIDE TAPE AND PLASTIC REEL.
10. CONTACT: 0.00076[.000030] MINIMUM GOLD ON MATING AREA, 0.00064[.000025] MINIMUM SEMI-BRIGHT NICKEL ON MATING AREA, 0.00254[.000100] MINIMUM MATTE 60/40 TIN-LEAD ON SOLDER TAIL, ALL OVER 0.00127 [.000050] MINIMUM MATTE NICKEL.

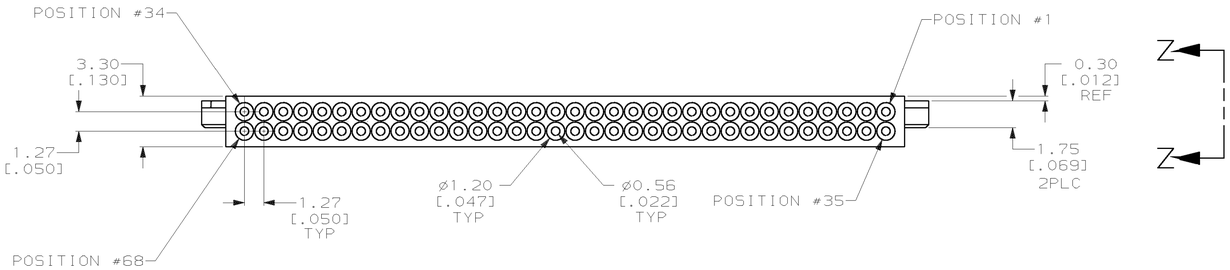

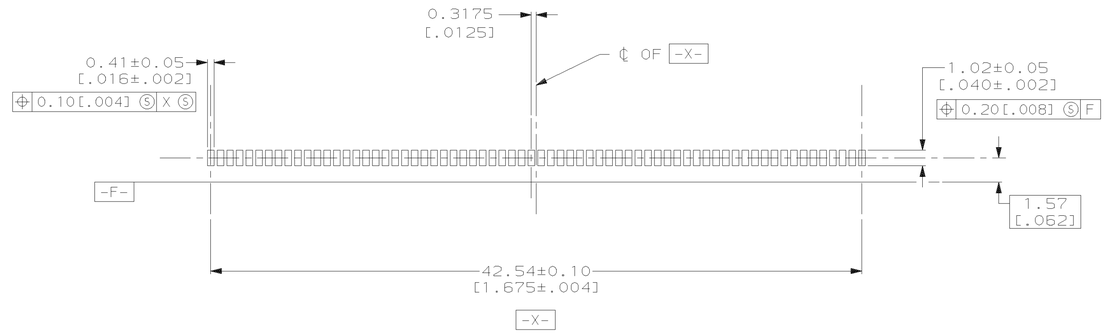

RECOMMENDED PC BOARD LAYOUT

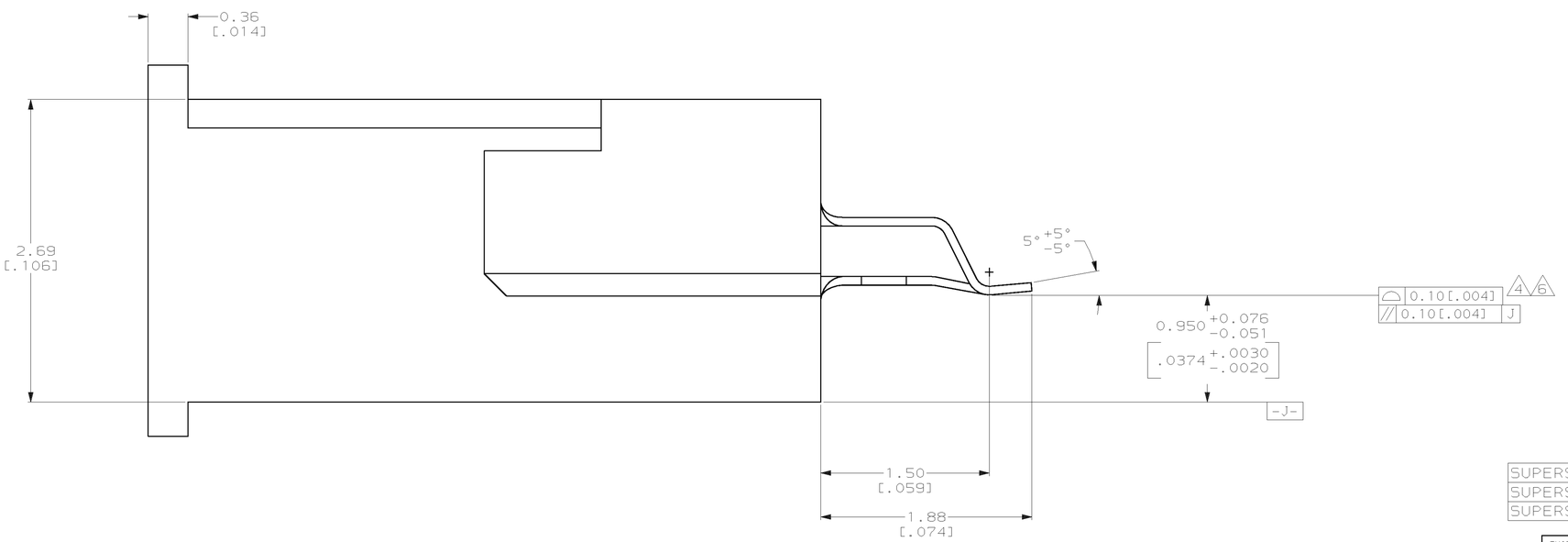

VIEW Z-Z
SCALE 40:1

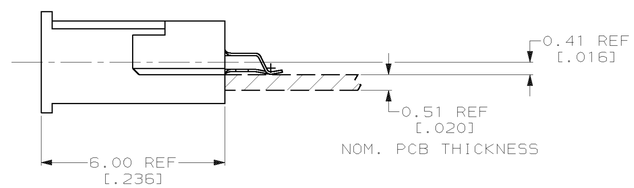

RECOMMENDED PC BOARD LOCATION
SCALE: 10:1

	PLATING	MATERIAL	PACKAGING	PART NUMBER
	10	1 2	9	146749-5
			8	146749-4
SUPERSEDED BY 146749-5	3	1 2	9	146749-3
SUPERSEDED BY 146749-4			8	146749-2
SUPERSEDED BY 146749-5			7	146749-1

THIS DRAWING IS A CONTROLLED DOCUMENT.

DIMENSIONS: mm [INCHES]

TOLERANCES UNLESS OTHERWISE SPECIFIED:
0 PLC ±-
1 PLC ±-
2 PLC ±0.13 [.005]
3 PLC ±-
4 PLC ±-
ANGLES ±30'

MATERIAL 1 2
FINISH 3

DWN C.REIFSNYDER 20 AUG 96
CHK D.DIXON 12 SEP 96
APVD D.DIXON 18 SEP 96
PRODUCT SPEC —
APPLICATION SPEC —
WEIGHT —

AMP Incorporated
Harrisburg, PA 17105-3608

NAME RECEPTACLE ASSEMBLY, SURFACE MOUNT, IN-LINE, 68 POSITION, 0.41[.016] OFFSET, AMP MEMORY CARD

SIZE A1 CAGE CODE 00779 DRAWING NO C-146749

CUSTOMER DRAWING

SCALE 5:1 SHEET 1 OF 1 REV G