REV.	DATE	DESCRIPTION
NC	01/02/07	INITIAL RELEASE
A1	10/16/07	REVISE BODY DIA. (7.8mm) AND FERRULE I.D. (4.4mm).
		REVISE CABLE STRIPPING LENGTH (13.6)

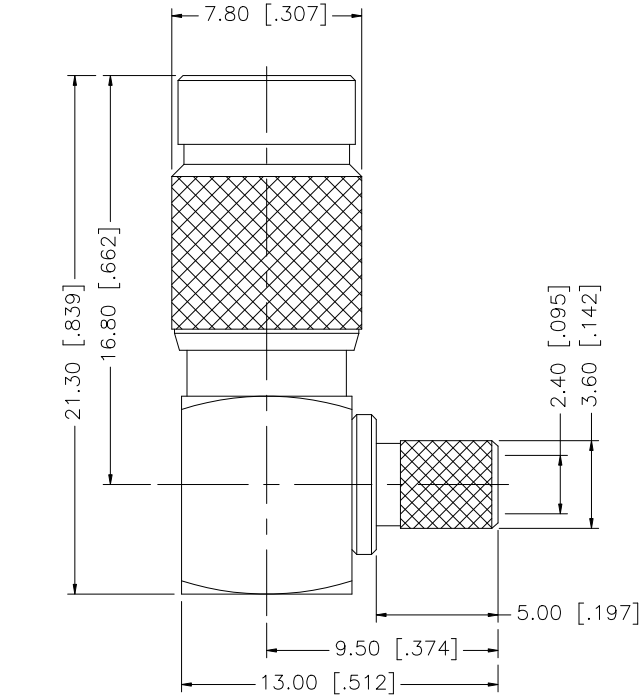

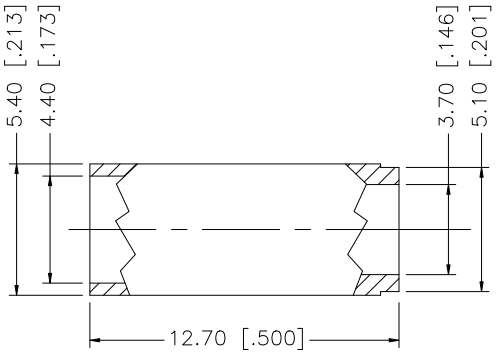

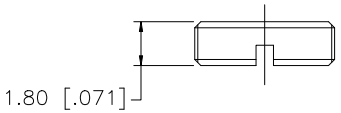

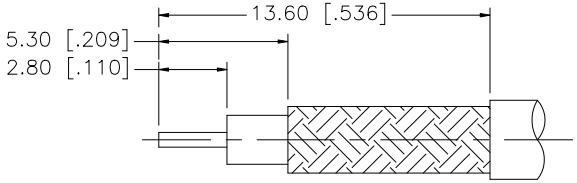

RECOMMENDED CABLE STRIPPING DIM'S

NOTES:

1. CRIMPED FERRULE HEX CRIMP SIZE .128"
2. CONTACT PIN TO SOLDER.

	DESCRIPTION	MATERIAL	FINISH	QTY
8				
7				
6				
5				
4	FERRULE	COPPER	NICKEL	1
3	CONTACT PIN	BRASS	GOLD	1
2	INSULATOR	TEFLON	NATURAL	1
1	BODY	BRASS	NICKEL	1

UNLESS OTHERWISE SPECIFIED DIMENSIONS ARE IN MILLIMETERS. DIMENSIONS IN [ ] ARE IN INCHES AND FOR CUSTOMER REFERANCE ONLY.

UNLESS OTHERWISE SPECIFIED TOLERANCES FOR MILLIMETERS ARE:
0.5 – 8mm ± 0.20mm
8 – 30mm ± 0.40mm
30 – 120mm ± 0.50mm

UNLESS OTHERWISE SPECIFIED TOLERANCES FOR INCHES ARE:
.020 – .315 = ± 0.007"
.315 – 1.180 = ± 0.015"
1.180 – 4.724 = ± 0.020"

DO NOT SCALE DRAWING

APPROVALS		DATE
DRAWN	G.R.S.	10/16/07
CHECKED		
ISSUED		
SHEET	1 OF 1	

CAD FILE C:/282/282119-75.DWG

Amphenol Connex

PART DESCRIPTION
1.0/2.3 R/A CRIMP PLUG
AT&T 735A CABLE – 75ohm

PART NO. 282119-75

DWG. NO. 282119-75 revA1.DWG | REV. A1 | SIZE A | SCALE NA