Programmable logic arrays (22 × 42 × 10)

PLUS173B/D

DESCRIPTION

The PLUS173 PLDs are high speed, combinatorial Programmable Logic Arrays. The Philips Semiconductors state-of-the-art Oxide Isolated Bipolar fabrication process is employed to produce propagation delays as short as 12ns.

The 24-pin PLUS173 devices have a programmable AND array and a programmable OR array. Unlike PAL ® devices, 100% product term sharing is supported. Any of the 32 logic product terms can be connected to any or all of the 10 output OR gates. Most PAL ICs are limited to 7 AND terms per OR function; the PLUS173 devices can support up to 32 input wide OR functions.

The polarity of each output is user-programmable as either Active-High or Active-Low, thus allowing AND-OR or AND-NOR logic implementation. This feature adds an element of design flexibility, particularly when implementing complex decoding functions.

The PLUS173 devices are user-programmable using one of several commercially available, industry standard PLD programmers.

FEATURES

- I/O propagation delays (worst case)
  - PLUS173B – 15ns max.
  - PLUS173D – 12ns max.
- Functional superset of 20L10 and most other 24-pin combinatorial PAL devices
- Two programmable arrays
  - Supports 32 input wide OR functions
- 12 inputs
- 10 bi-directional I/O
- 42 AND gates
  - 32 logic product terms
  - 10 direction control terms
- Programmable output polarity
  - Active-High or Active-Low
- Security fuse
- 3-State outputs
- Power dissipation: 750mW (typ.)
- TTL Compatible

APPLICATIONS

- Random logic
- Code converters
- Fault detectors
- Function generators
- Address mapping
- Multiplexing

PIN CONFIGURATIONS

N Package

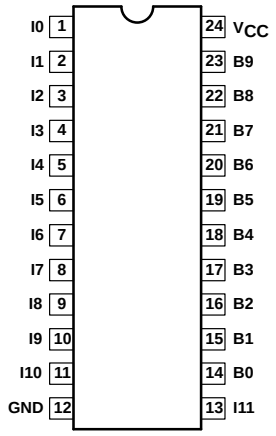

N = Plastic Dual In-Line (300mil-wide)

A Package

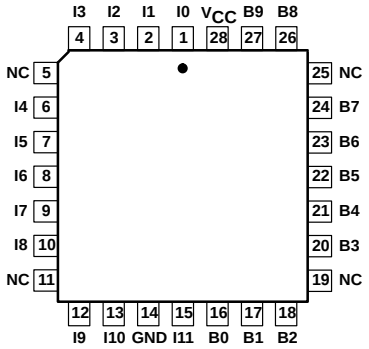

A = Plastic Leaded Chip Carrier

ORDERING INFORMATION

DESCRIPTION	t_{PD} (MAX)	ORDER CODE	DRAWING NUMBER
24-Pin Plastic Dual In-Line 300mil-wide	15ns	PLUS173BN	0410D
24-Pin Plastic Dual In-Line 300mil-wide	12ns	PLUS173DN	0410D
28-Pin Plastic Leaded Chip Carrier	15ns	PLUS173BA	0401F
28-Pin Plastic Leaded Chip Carrier	12ns	PLUS173DA	0401F

®PAL is a registered trademark of Advanced Micro Devices Corporation.

Programmable logic arrays (22 × 42 × 10)

PLUS173B/D

LOGIC DIAGRAM

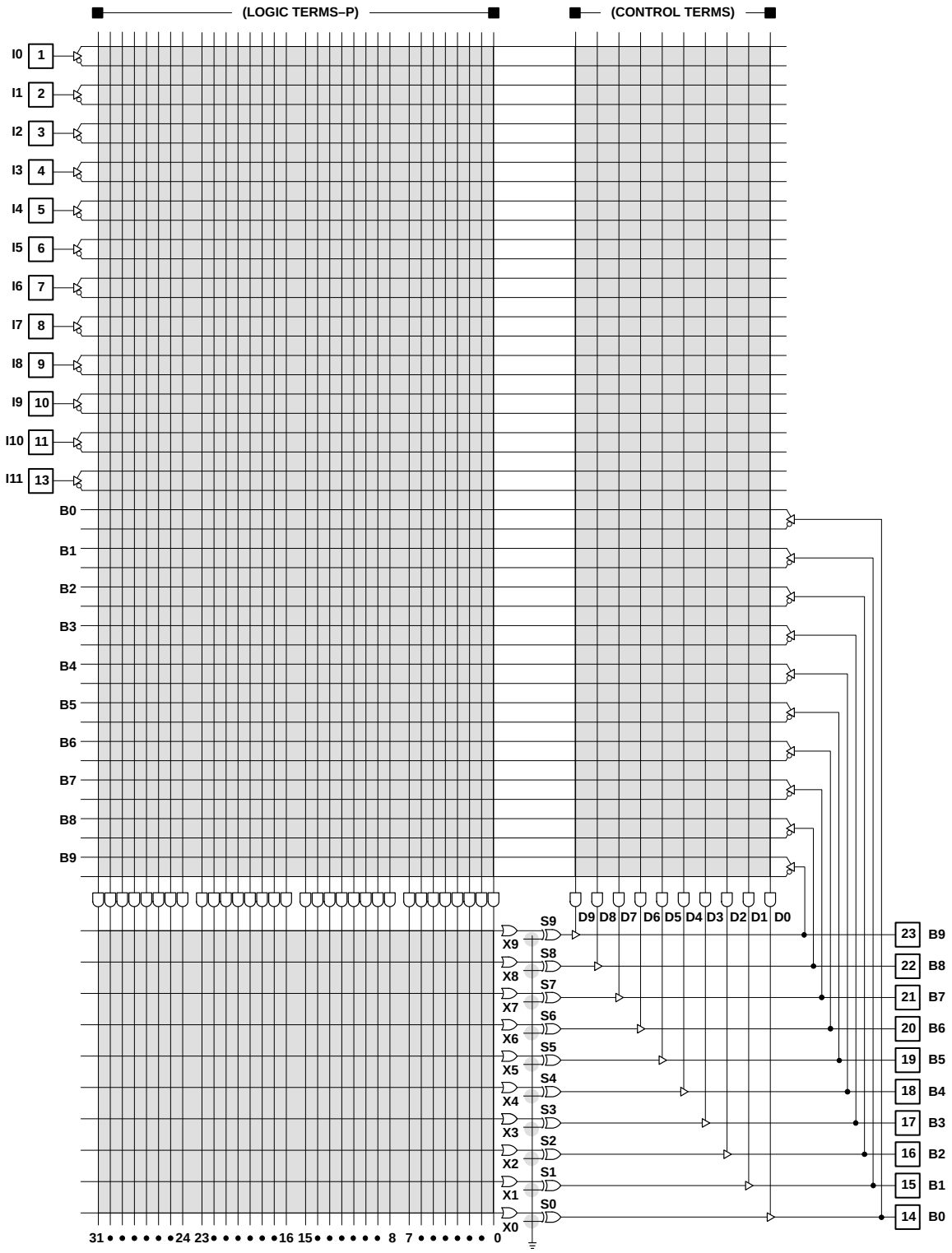

NOTES:
1. All programmed ‘AND’ gate locations are pulled to logic “1”.
2. All programmed ‘OR’ gate locations are pulled to logic “0”.
3. ● Programmable connection.

Programmable logic arrays (22 × 42 × 10)

PLUS173B/D

FUNCTIONAL DIAGRAM

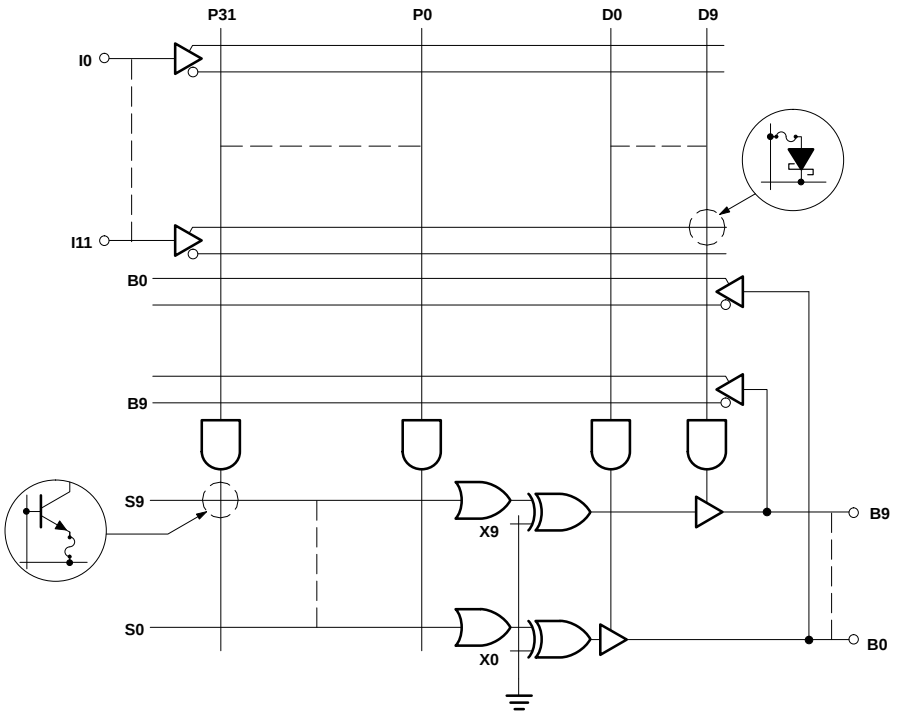

ABSOLUTE MAXIMUM RATINGS[1]

SYMBOL	PARAMETER	RATING MIN	RATING MAX	UNIT
V_{CC}	Supply voltage		+7	V_{DC}
V_{IN}	Input voltage		+5.5	V_{DC}
V_{OUT}	Output voltage		+5.5	V_{DC}
I_{IN}	Input currents	–30	+30	mA
I_{OUT}	Output currents		+100	mA
T_{amb}	Operating free-air temperature range	0	+75	°C
T_{stg}	Storage temperature range	–65	+150	°C

NOTES:

1. Stresses above those listed may cause malfunction or permanent damage to the device. This is a stress rating only. Functional operation at these or any other condition above those indicated in the operational and programming specification of the device is not implied.

THERMAL RATINGS

TEMPERATURE	
Maximum junction	150°C
Maximum ambient	75°C
Allowable thermal rise ambient to junction	75°C

DC ELECTRICAL CHARACTERISTICS

$0°C \le T_{amb} \le +75°C$, $4.75 \le V_{CC} \le 5.25V$

SYMBOL	PARAMETER	TEST CONDITIONS	LIMITS MIN	LIMITS TYP[1]	LIMITS MAX	UNIT
Input voltage[2]						
V_{IL}	Low	V_{CC} = MIN			0.8	V
V_{IH}	High	V_{CC} = MAX	2.0			V
V_{IC}	Clamp	V_{CC} = MIN, I_{IN} = –12mA		–0.8	–1.2	V
Output voltage[2]						
		V_{CC} = MIN				
V_{OL}	Low[4]	I_{OL} = 15mA			0.5	V
V_{OH}	High[5]	I_{OH} = –2mA	2.4			V
Input current[9]						
		V_{CC} = MAX				
I_{IL}	Low	V_{IN} = 0.45V			–100	µA
I_{IH}	High	V_{IN} = V_{CC}			40	µA
Output current						
		V_{CC} = MAX				
$I_{O(OFF)}$	Hi-Z state[8]	V_{OUT} = 2.7V			80	µA
		V_{OUT} = 0.45V			–140	
I_{OS}	Short circuit[3, 5, 6]	V_{OUT} = 0V	–15		–70	mA
I_{CC}	V_{CC} supply current[7]	V_{CC} = MAX		150	200	mA
Capacitance						
		V_{CC} = 5V				
I_{IN}	Input	V_{IN} = 2.0V		8		pF
C_B	I/O	V_B = 2.0V		15		pF

NOTES:
1. All typical values are at V_{CC} = 5V, T_{amb} = +25°C.
2. All voltage values are with respect to network ground terminal.
3. Test one at a time.
4. Measured with inputs I0 – I4 = 0V, inputs I5 – I9 = 4.5V, I11 = 4.5V and I19 = 10V. For outputs B0 – B4 and for outputs B5 – B9 apply the same conditions except I11 = 0V.
5. Same conditions as Note 4 except input I11 = +10V.
6. Duration of short circuit should not exceed 1 second.
7. I_{CC} is measured with inputs I0 – I11 and B0 – B9 = 0V. Part in Virgin State.
8. Leakage values are a combination of input and output leakage.
9. I_{IL} and I_{IH} limits are for dedicated inputs only (I0 – I11).

Programmable logic arrays (22 × 42 × 10)

PLUS173B/D

AC ELECTRICAL CHARACTERISTICS

$0°C \le T_{amb} \le +75°C$, $4.75 \le V_{CC} \le 5.25V$, $R_1 = 300\Omega$, $R_2 = 390\Omega$

SYMBOL	PARAMETER	FROM	TO	TEST CONDITION	LIMITS						UNIT
					PLUS173B			PLUS173D			
					MIN	TYP	MAX	MIN	TYP	MAX	
t_{PD}	Propagation Delay[2]	Input +/–	Output +/–	C_L = 30pF		11	15		10	12	ns
t_{OE}	Output Enable[1]	Input +/–	Output –	C_L = 30pF		11	15		10	12	ns
t_{OD}	Output Disable[1]	Input +/–	Output +	C_L = 5pF		11	15		10	12	ns

NOTES:
1. For 3-State outputs; output enable times are tested with C_L = 30pF to the 1.5V level, and S_1 is open for high-impedance to High tests and closed for high-impedance to Low tests. Output disable times are tested with C_L = 5pF. High-to-High impedance tests are made to an output voltage of $V_T = (V_{OH} – 0.5V)$ with S_1 open, and Low-to-High impedance tests are made to the $V_T = (V_{OL} + 0.5V)$ level with S_1 closed.
2. All propagation delays are measured and specified under worst case conditions.

VOLTAGE WAVEFORM

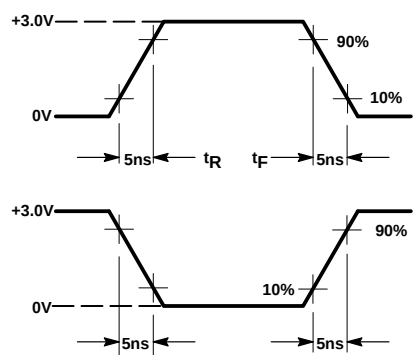

MEASUREMENTS:
All circuit delays are measured at the +1.5V level of inputs and outputs, unless otherwise specified.

Input Pulses

TEST LOAD CIRCUIT

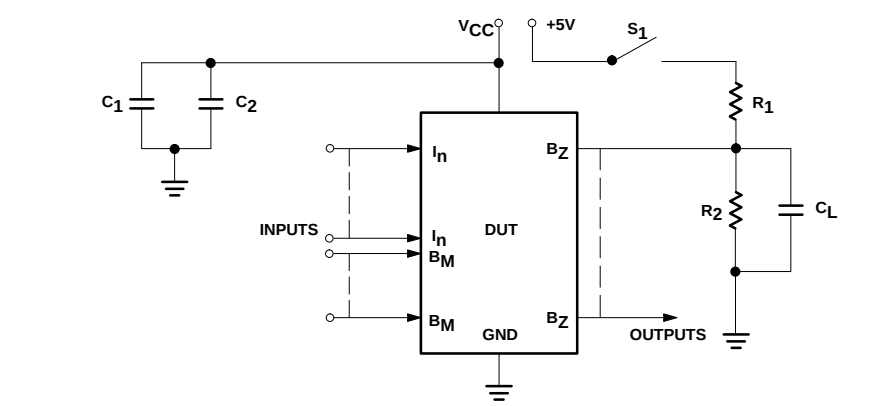

NOTE:
C_1 and C_2 are to bypass V_{CC} to GND.

Test Load Circuit

TIMING DEFINITIONS

SYMBOL	PARAMETER
t_{PD}	Propagation delay between input and output.
t_{OD}	Delay between input change and when output is off (Hi-Z or High).
t_{OE}	Delay between input change and when output reflects specified output level.

TIMING DIAGRAM

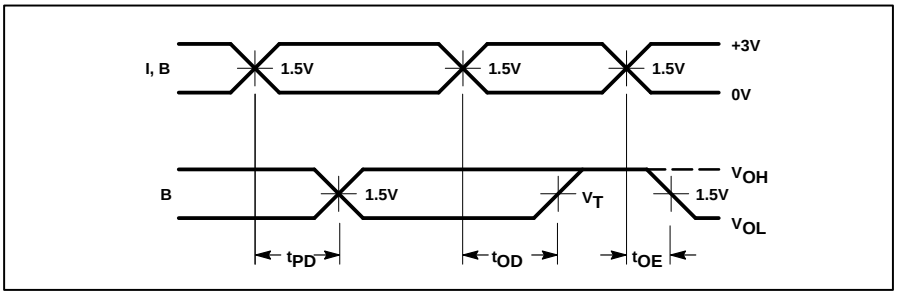

Programmable logic arrays ($22 \times 42 \times 10$)

PLUS173B/D

LOGIC PROGRAMMING

The PLUS173 series is fully supported by industry standard (JEDEC compatible) PLD CAD tools, including Philips Semiconductors SNAP design software package. ABEL™ and CUPL™ design software packages also support the PLUS173 architecture.

All packages allow Boolean and state equation entry formats. SNAP, ABEL and CUPL also accept, as input, schematic capture format.

PLUS173 logic designs can also be generated using the program table entry format, which is detailed on the following page. This program table entry format is supported by SNAP only.

To implement the desired logic functions, the state of each logic variable from logic equations (I, B, O, P, etc.) is assigned a symbol. The symbols for TRUE, COMPLEMENT, INACTIVE, PRESET, etc., are defined below.

PROGRAMMING AND SOFTWARE SUPPORT

Refer to Section 9 *(Development Software)* and Section 10 *(Third-Party Programmer/ Software Support)* of this data handbook for additional information.

OUTPUT POLARITY – (B)

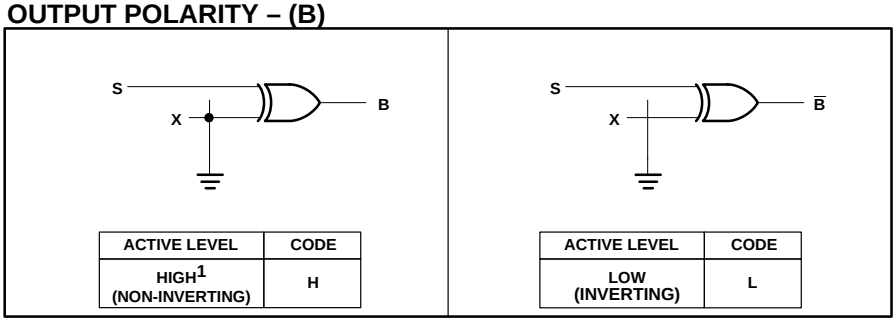

ACTIVE LEVEL	CODE
HIGH[1] (NON-INVERTING)	H

ACTIVE LEVEL	CODE
LOW (INVERTING)	L

AND ARRAY – (I, B)

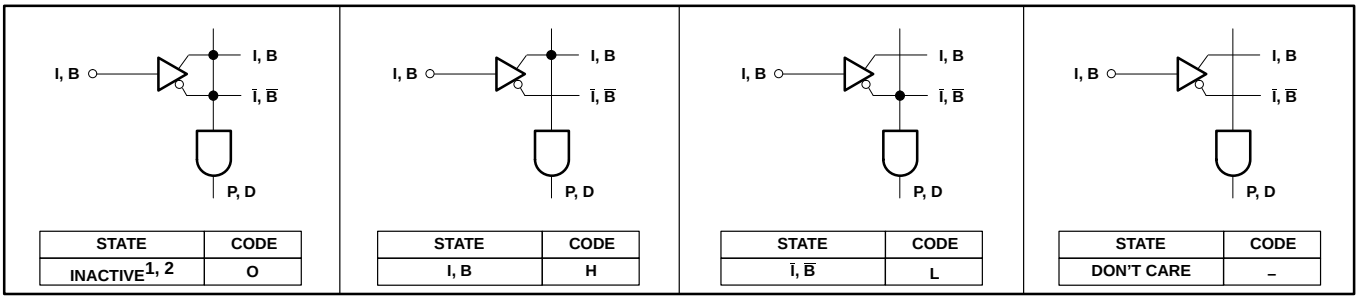

STATE	CODE
INACTIVE[1, 2]	O

STATE	CODE
I, B	H

STATE	CODE
$\overline{I}$, $\overline{B}$	L

STATE	CODE
DON'T CARE	–

OR ARRAY – (B)

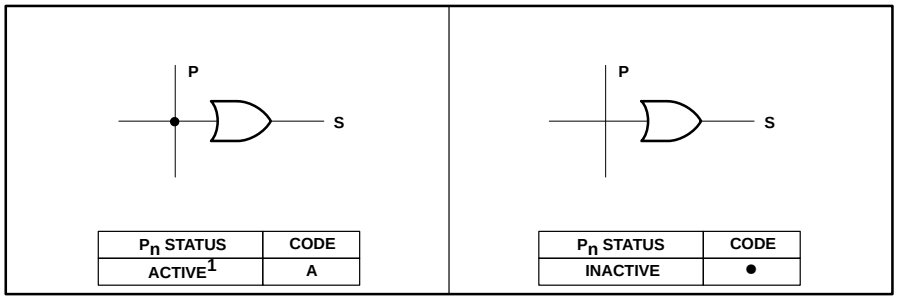

P_n STATUS	CODE
ACTIVE[1]	A

P_n STATUS	CODE
INACTIVE	●

NOTES:

1. This is the initial unprogrammed state of all link pairs. It is normally associated with all unused (inactive) AND gates P_n, D_n.
2. Any gate P_n, D_n will be unconditionally inhibited if both the true and complement of any input (I, B) are left intact.

VIRGIN STATE

A factory shipped virgin device contains all fusible links intact, such that:

1. All outputs are at "H" polarity.
2. All P_n terms are disabled.
3. All P_n terms are active on all outputs.

ABEL is a trademark of Data I/O Corp.
CUPL is a trademark of Logical Devices, Inc.

Programmable logic arrays (22 × 42 × 10)

PLUS173B/D

PROGRAM TABLE

CUSTOMER NAME_____

PHILIPS DEVICE # _____

PROGRAM TABLE #____ REV___ DATE_____

NOTES
1. The PLA is shipped with all links intact. Thus a background of entries corresponding to states of virgin links exists in the table. (Shown BLANK for clarity.)
2. Unused I and B bits in the AND array must be programmed Don't Care (—).
3. Unused product terms can be left blank.

OR

ACTIVE	A
INACTIVE	•

B(0)

CONTROL

HIGH	H
LOW	L

(POL)

AND

INACTIVE	0
I, B	H
$\overline{I}$, $\overline{B}$	L
DON'T CARE	—

I, B(I)

POLARITY

TERM	AND I 11	10	9	8	7	6	5	4	3	2	1	0	AND B(I) 9	8	7	6	5	4	3	2	1	0	OR B(0) 9	8	7	6	5	4	3	2	1	0
0																																
1																																
2																																
3																																
4																																
5																																
6																																
7																																
8																																
9																																
10																																
11																																
12																																
13																																
14																																
15																																
16																																
17																																
18																																
19																																
20																																
21																																
22																																
23																																
24																																
25																																
26																																
27																																
28																																
29																																
30																																
31																																
D9																																
D8																																
D7																																
D6																																
D5																																
D4																																
D3																																
D2																																
D1																																
D0																																
PIN	13	11	10	9	8	7	6	5	4	3	2	1	23	22	21	20	19	18	17	16	15	14	23	22	21	20	19	18	17	16	15	14
VARIABLE NAME																																

Programmable logic arrays (22 × 42 × 10)

PLUS173B/D

SNAP RESOURCE SUMMARY DESIGNATIONS