ACTS280MS

Radiation Hardened 9-Bit Odd/ Even Parity Generator Checker

January 1996

Features

- **Devices QML Qualified in Accordance with MIL-PRF-38535**
- **Detailed Electrical and Screening Requirements are Contained in SMD# 5962-96720 and Intersil' QM Plan**
- **1.25 Micron Radiation Hardened SOS CMOS**
- **Total Dose . . . . . >300K RAD (Si)**
- **Single Event Upset (SEU) Immunity: <1 x 10^{-10} Errors/Bit/Day (Typ)**
- **SEU LET Threshold . . . . . >100 MEV-cm^2/mg**
- **Dose Rate Upset . . . . . >10^{11} RAD (Si)/s, 20ns Pulse**
- **Dose Rate Survivability . . . . . >10^{12} RAD (Si)/s, 20ns Pulse**
- **Latch-Up Free Under Any Conditions**
- **Military Temperature Range . . . . . -55°C to +125°C**
- **Significant Power Reduction Compared to ALSTTL Logic**
- **DC Operating Voltage Range . . . . . 4.5V to 5.5V**
- **Input Logic Levels**
  - **VIL = 0.8V Max**
  - **VIH = VCC/2 Min**
- **Input Current ≤ 1μA at VOL, VOH**
- **Fast Propagation Delay . . . . . 24ns (Max), 16ns (Typ)**

Description

The Intersil ACTS280MS is a Radiation Hardened 9-bit odd/even parity generator checker device. Both odd and even parity outputs are available for generating or checking parity for words up to 9 bits long. Even parity is indicated (EVEN output high) when an even number of data inputs are high. Odd parity is indicated (ODD output high) when an odd number of data inputs are high. Parity checking for larger words can be accomplished by tying EVEN output to any input of an additional ACTS280MS.

The ACTS280MS utilizes advanced CMOS/SOS technology to achieve high-speed operation. This device is a member of a radiation hardened, high-speed, CMOS/SOS Logic Family.

The ACTS280MS is supplied in a 14 lead Ceramic Flatpack (K suffix) or a Ceramic Dual-In-Line Package (D suffix).

Pinouts

14 PIN CERAMIC DUAL-IN-LINE
MIL-STD-1835 DESIGNATOR, CDIP2-T14,
LEAD FINISH C
TOP VIEW

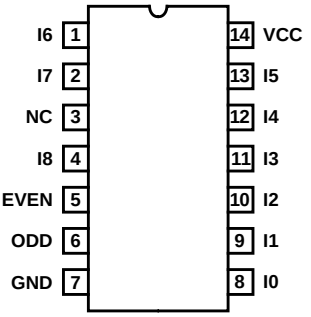

14 PIN CERAMIC FLATPACK
MIL-STD-1835 DESIGNATOR, CDFP3-F14
LEAD FINISH C
TOP VIEW

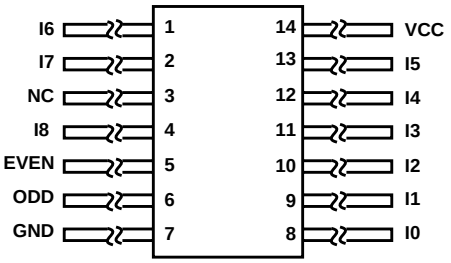

Ordering Information

PART NUMBER	TEMPERATURE RANGE	SCREENING LEVEL	PACKAGE
5962F9672001VCC	-55°C to +125°C	MIL-PRF-38535 Class V	14 Lead SBDIP
5962F9672001VXC	-55°C to +125°C	MIL-PRF-38535 Class V	14 Lead Ceramic Flatpack
ACTS280D/Sample	25°C	Sample	14 Lead SBDIP
ACTS280K/Sample	25°C	Sample	14 Lead Ceramic Flatpack
ACTS280HMSR	25°C	Die	Die

CAUTION: These devices are sensitive to electrostatic discharge; follow proper IC Handling Procedures.

http://www.intersil.com or 407-727-9207 | Copyright © Intersil Corporation 1999

Spec Number **518827**
File Number **3569.1**

Functional Diagram

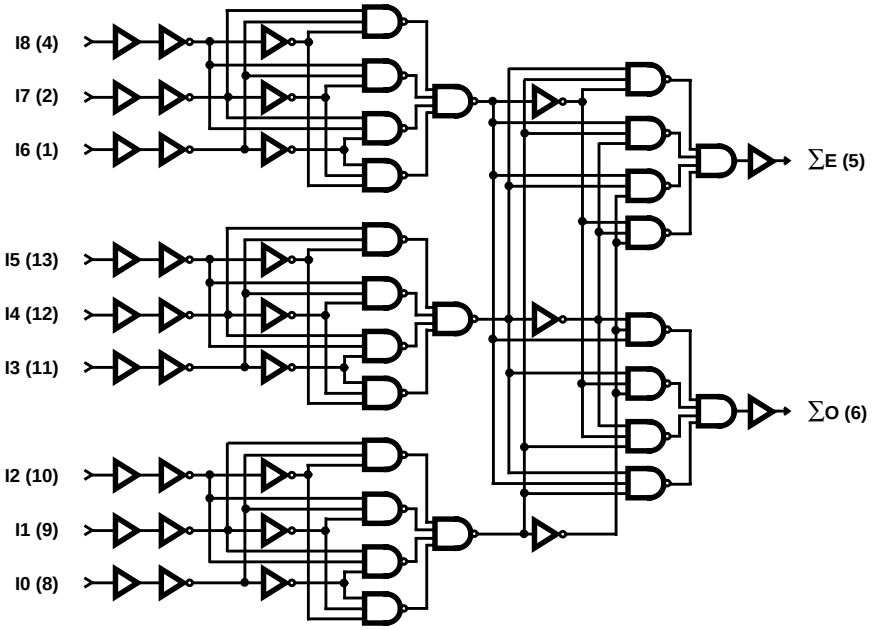

NC = 3
VDD = 14
GND = 7

Die Characteristics

DIE DIMENSIONS:

88 mils x 88 mils
2.24mm x 2.24mm

METALLIZATION:

Type: AlSi
Metal 1 Thickness: 7.125kÅ ±1.125kÅ
Metal 2 Thickness: 9kÅ ±1kÅ

GLASSIVATION:

Type: SiO_2
Thickness: 8kÅ ±1kÅ

WORST CASE CURRENT DENSITY:

$<2.0 \times 10^5$ A/cm^2

BOND PAD SIZE:

> 4.3 mils x 4.3 mils
> 110µm x 110µm

Metallization Mask Layout

ACTS280MS

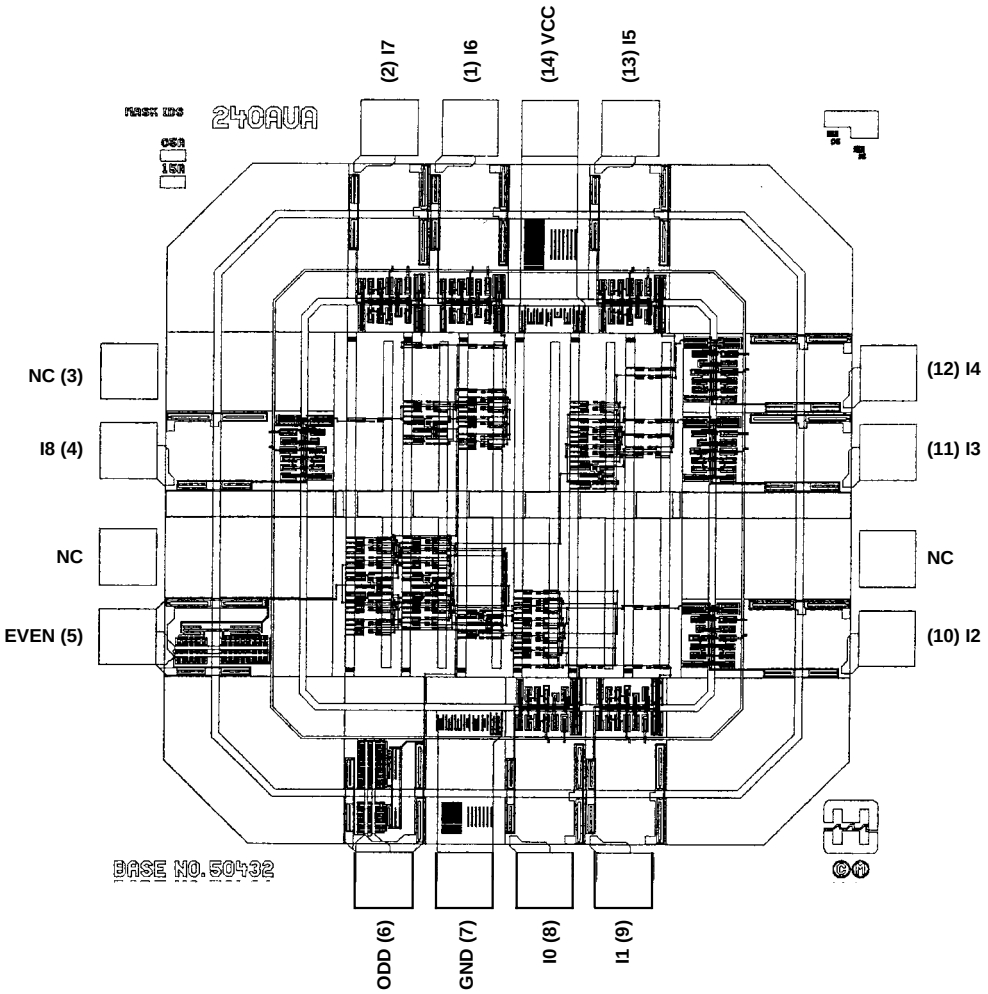

All Intersil semiconductor products are manufactured, assembled and tested under **ISO9000** quality systems certification.

Intersil products are sold by description only. Intersil Corporation reserves the right to make changes in circuit design and/or specifications at any time without notice. Accordingly, the reader is cautioned to verify that data sheets are current before placing orders. Information furnished by Intersil is believed to be accurate and reliable. However, no responsibility is assumed by Intersil or its subsidiaries for its use; nor for any infringements of patents or other rights of third parties which may result from its use. No license is granted by implication or otherwise under any patent or patent rights of Intersil or its subsidiaries.

For information regarding Intersil Corporation and its products, see web site **http://www.intersil.com**

Sales Office Headquarters

NORTH AMERICA
Intersil Corporation
P. O. Box 883, Mail Stop 53-204
Melbourne, FL 32902
TEL: (407) 724-7000
FAX: (407) 724-7240

EUROPE
Intersil SA
Mercure Center
100, Rue de la Fusee
1130 Brussels, Belgium
TEL: (32) 2.724.2111
FAX: (32) 2.724.22.05

ASIA
Intersil (Taiwan) Ltd.
Taiwan Limited
7F-6, No. 101 Fu Hsing North Road
Taipei, Taiwan
Republic of China
TEL: (886) 2 2716 9310
FAX: (886) 2 2715 3029