**CMUD4448**

**ULTRAmini™**
**HIGH SPEED**
**SWITCHING DIODE**

ULTRAmini™

**SOT-523 CASE**

**Central™**
**Semiconductor Corp.**

**DESCRIPTION:**

The CENTRAL SEMICONDUCTOR CMUD4448 type is an ultra-high speed silicon switching diode manufactured by the epitaxial planar process, epoxy molded in an ULTRAmini™ surface mount package, designed for high speed switching applications. Marking code is DAA.

**MAXIMUM RATINGS:** ($T_A$=25°C)

| | SYMBOL | | UNITS |
|---|---|---|---|
| Continuous Reverse Voltage | $V_R$ | 75 | V |
| Peak Repetitive Reverse Voltage | $V_{RRM}$ | 100 | V |
| Continuous Forward Current | $I_F$ | 250 | mA |
| Peak Repetitive Forward Current | $I_{FRM}$ | 250 | mA |
| Forward Surge Current, tp=1 μsec. | $I_{FSM}$ | 4000 | mA |
| Forward Surge Current, tp=1 sec. | $I_{FSM}$ | 1000 | mA |
| Power Dissipation | $P_D$ | 250 | mW |
| Operating and Storage Junction Temperature | $T_J, T_{stg}$ | -65 to +150 | °C |
| Thermal Resistance | $\Theta_{JA}$ | 500 | °C/W |

**ELECTRICAL CHARACTERISTICS:** ($T_A$=25°C unless otherwise noted)

| SYMBOL | TEST CONDITIONS | MIN | MAX | UNITS |
|---|---|---|---|---|
| $BV_R$ | $I_R$=5.0μA | 75 | | V |
| $BV_R$ | $I_R$=100μA | 100 | | V |
| $I_R$ | $V_R$=20V | | 25 | nA |
| $V_F$ | $I_F$=5.0mA | 0.62 | 0.72 | V |
| $V_F$ | $I_F$=100mA | | 1.0 | V |
| $C_T$ | $V_R$=0, f=1 MHz | | 4.0 | pF |
| $t_{rr}$ | $I_R$=$I_F$=10mA, $R_L$=100Ω, Rec. to 1.0mA | | 4.0 | ns |

R0 ( 12-September 2001)

**Central™**
**Semiconductor Corp.**

**CMUD4448**

**ULTRAmini™**
**HIGH SPEED**
**SWITCHING DIODE**

**SOT-523 CASE - MECHANICAL OUTLINE**

BOTTOM VIEW

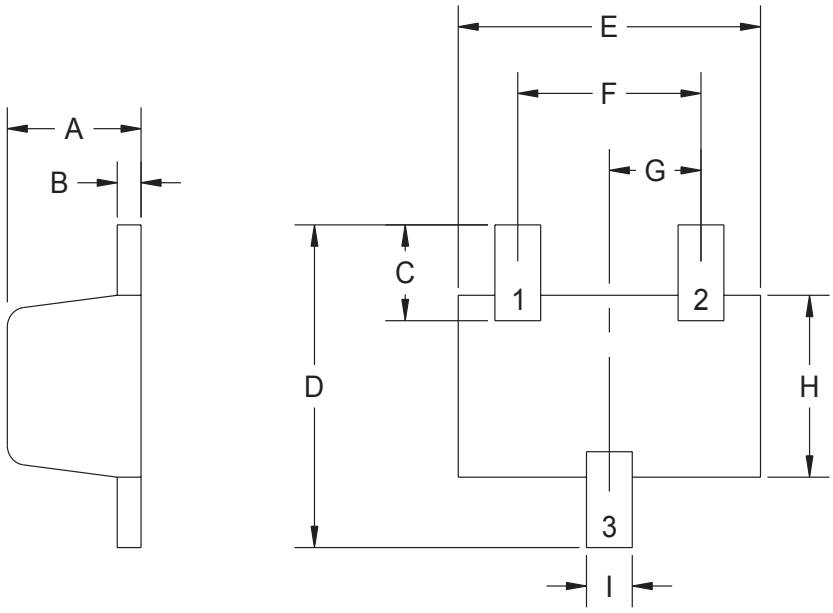


R1

LEAD CODE:
1) Anode
2) No Connection
3) Cathode

**MARKING CODE: DAA**

| DIMENSIONS | | | | |
|---|---|---|---|---|
| | INCHES | | MILLIMETERS | |
| SYMBOL | MIN | MAX | MIN | MAX |
| A | 0.025 | 0.029 | 0.63 | 0.73 |
| B | 0.004 | 0.005 | 0.10 | 0.13 |
| C | 0.015 | 0.019 | 0.39 | 0.49 |
| D | 0.061 | 0.065 | 1.55 | 1.65 |
| E | 0.061 | 0.065 | 1.55 | 1.65 |
| F | 0.039 | 0.040 | 0.98 | 1.02 |
| G | 0.019 | 0.020 | 0.48 | 0.52 |
| H | 0.033 | 0.037 | 0.83 | 0.93 |
| I | 0.009 | 0.010 | 0.23 | 0.25 |

SOT-523 (REV: R1)

R0 ( 12-September 2001)