BROADCOM®

Connecting everything®

BCM112X PRODUCT Brief

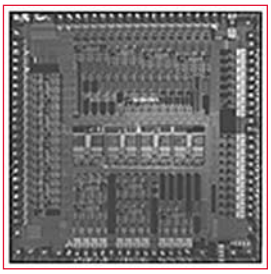

BCM112X HIGH-PERFORMANCE MIPS PROCESSORS

BCM112X FEATURES

- Two processors in 112x product line:
  - BCM1125H: 600 MHz – 1 GHz
  - BCM1125: 400 MHz – 800 MHz
- MIPS64™ CPU
  - Quad-issue in order pipeline; dual execute, dual memory pipes
  - Enhanced skew pipeline enables zero load-to-use penalty
  - 32-KB instruction cache, 32-KB data cache
  - Advanced branch predictors
- Fast, on-chip memory-coherent bus (ZBbus)
  - Connects the CPU, L2 cache, memory controller and I/O bridges
  - Runs at half the CPU core clock; 256 bits wide
- On-chip L2 cache
  - 256KB, shared by CPU and I/O bridges
  - Four-way associative, ECC protected
  - Ways can be removed to provide fast on-chip RAM
- DDR memory controller
  - One channel with a 64-bit data bus plus ECC
  - Runs up to 200 MHz clock rate, 400 Mbps data rate
  - Support for DDR SDRAM, SGRAM, and FCRAM
- High-speed packet interfaces
  - Two 10/100/1000 Ethernet MACs; 802.3 compliant
  - Option to configure MACs into packet FIFOs to enable OC-48 data rates
- PCI interface
  - 32-bit, 33/66 MHz PCI 2.2
  - Host bridge or target device
- BCM1125H: HyperTransport (LDT) I/O interface
  - Complies with HyperTransport standard for high-speed I/O fabric
  - 600-MHz clock rate, 1.2 Gbps data rate
  - Peak bandwidth of 19.2 Gbps on 8-bit link
  - Supports double-ended fabrics (linking two BCM1125Hs or BCM1125H and BCM1250)
- Integrated system I/O
  - Generic I/O for direct connect to boot ROM, FLASH, fast peripherals/ASICs
  - SMBus serial configuration interface
  - PCMCIA control interface
  - Two serial interfaces
- Extensive, on-chip debug features
- 4W @ 400 MHz
- Software-compatible with BCM1250
- Support for leading operating systems including VxWorks®, Linux®, NetBSD and QNX
- Evaluation board platform available with tools, firmware and software drivers

SUMMARY OF BENEFITS

- Industry-leading performance
  - 2 Dhrystone MIPS/MHz
  - Processing speed of up to 5 Mpps*
  - 128-Gbps on-chip bus bandwidth, 26-Gbps memory bandwidth, up to 29-Gbps total I/O bandwidth
- Low power dissipation starting at less than 4W @ 400 MHz
- High functional integration
- Programming ease and flexibility based on MIPS64 ISA
- Scalable system architecture
- Broad tools and system software support
- Software-compatible with BCM1250

*Based on internal Broadcom benchmark, using BCM112x for standard IPv4 L3 look-up/switching.

SUMMARY OF BENEFITS

The BCM112x's world-class performance, power efficiency and integration makes these processors ideal for a broad variety of systems including:

- Networking: routers, switches
- Control plane processing
- Line cards
- Broadband access: DSLAM, CMTS, BRAS
- Wireless base stations
- Storage: RAID controllers, NAS controllers, HBAs
- Web/networking/caching appliances
- Imaging: printers, copiers

Example: PCI card for TCP/IP Acceleration

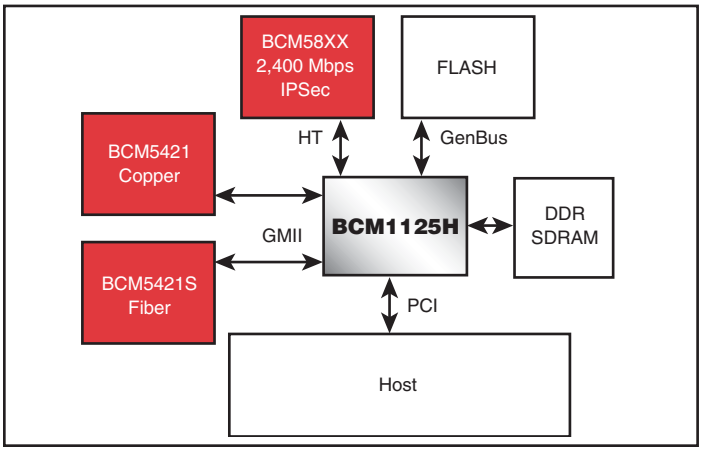

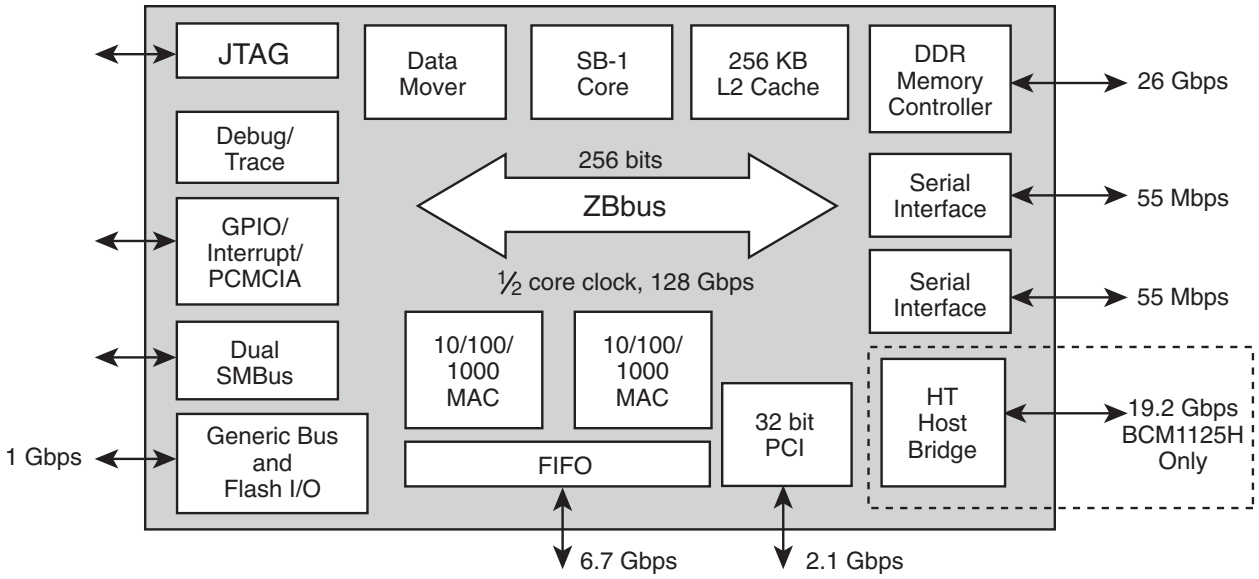

Broadcom's BCM112x products are state-of-the-art processor solutions targeted at the fast-growing networking, wireless communications, storage, server/networking appliance and imaging markets. BCM112x processors offer industry-leading performance, high functional integration, and low power levels in a small package required by next-generation networking applications.

The BCM1125H and BCM1125 are software-compatible with the dual-processor BCM1250 and share development and modeling tools, firmware, and operating systems with the processor. The BCM112x processors are intelligent systems on a chip consisting of a Broadcom SB-1 high performance MIPS64 CPU, a shared 256-KB L2 cache, a DDR memory controller, and an integrated I/O. All major blocks of the processor are connected together via the ZBbus, a high-speed, low-latency, split-transaction, memory-coherent bus. The bus implements the standard MESI protocol to ensure coherency between the CPU, L2 cache, I/O agents, and memory.

Two Gigabit Ethernet MACs (10/100/1000) enable easy interfacing to LANs. To enable higher data rates, or in cases where Ethernet protocol processing is not required, each MAC can be configured as an 8-bit packet FIFO, or both can be combined into a 16-bit packet FIFO. High-speed I/O is provided using a 66-MHz (rev 2.2) PCI local bus and, on the BCM1125H, AMD's HyperTransport™ (LDT) I/O fabric in addition to PCI.

Two serial ports are provided for WAN connections at up to T3/OC-1 rates (55 Mbps). To enable low-chip-count systems, the BCM112x processors also include a configurable generic bus that allows glueless connection of a boot ROM or FLASH memory and simple I/O peripherals. On-chip debugging, tracing, and performance monitoring functions assist both hardware and software designers in debugging and tuning the system. The system can be run in either big- or little-endian mode. The BCM112x processors are manufactured in TSMC's 0.13-µ process, and are packaged in pin-compatible 31-mm BGA packages.

Implementation of MIPS64 ISA

The SB-1 CPU core is a high-performance implementation of the standard MIPS64 Instruction Set Architecture (ISA), and incorporates the MIPS-3D and MIPS-MDMX Application Specific Extensions (ASEs). The core supports a four-issue enhanced skew pipeline and can dispatch up to two memory and two ALU (Integer, Floating Point, MDMX or MIPS-3D) instructions per cycle.

Connecting everything®

BROADCOM®

BROADCOM CORPORATION
16215 Alton Parkway, P.O. Box 57013
Irvine, California 92619-7013

112X-PB03-R-4.13.03

Phone: 949-450-8700
FAX: 949-450-8710
Email: info@broadcom.com
Web: www.broadcom.com